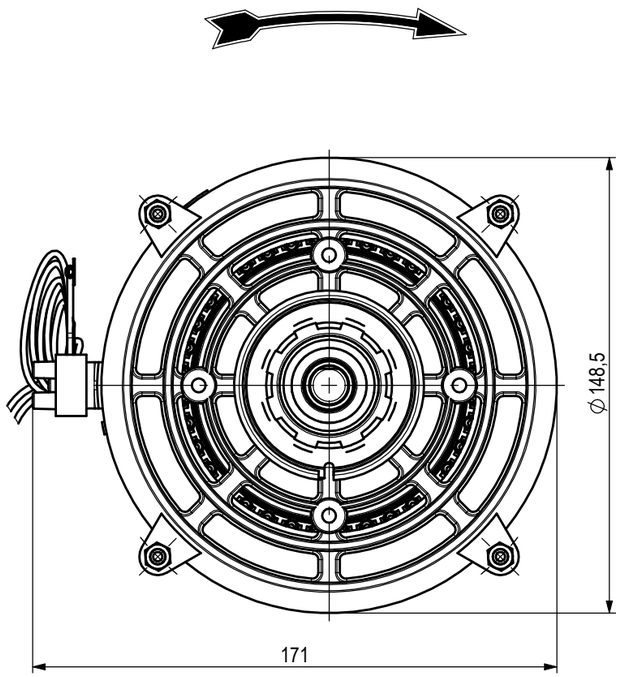

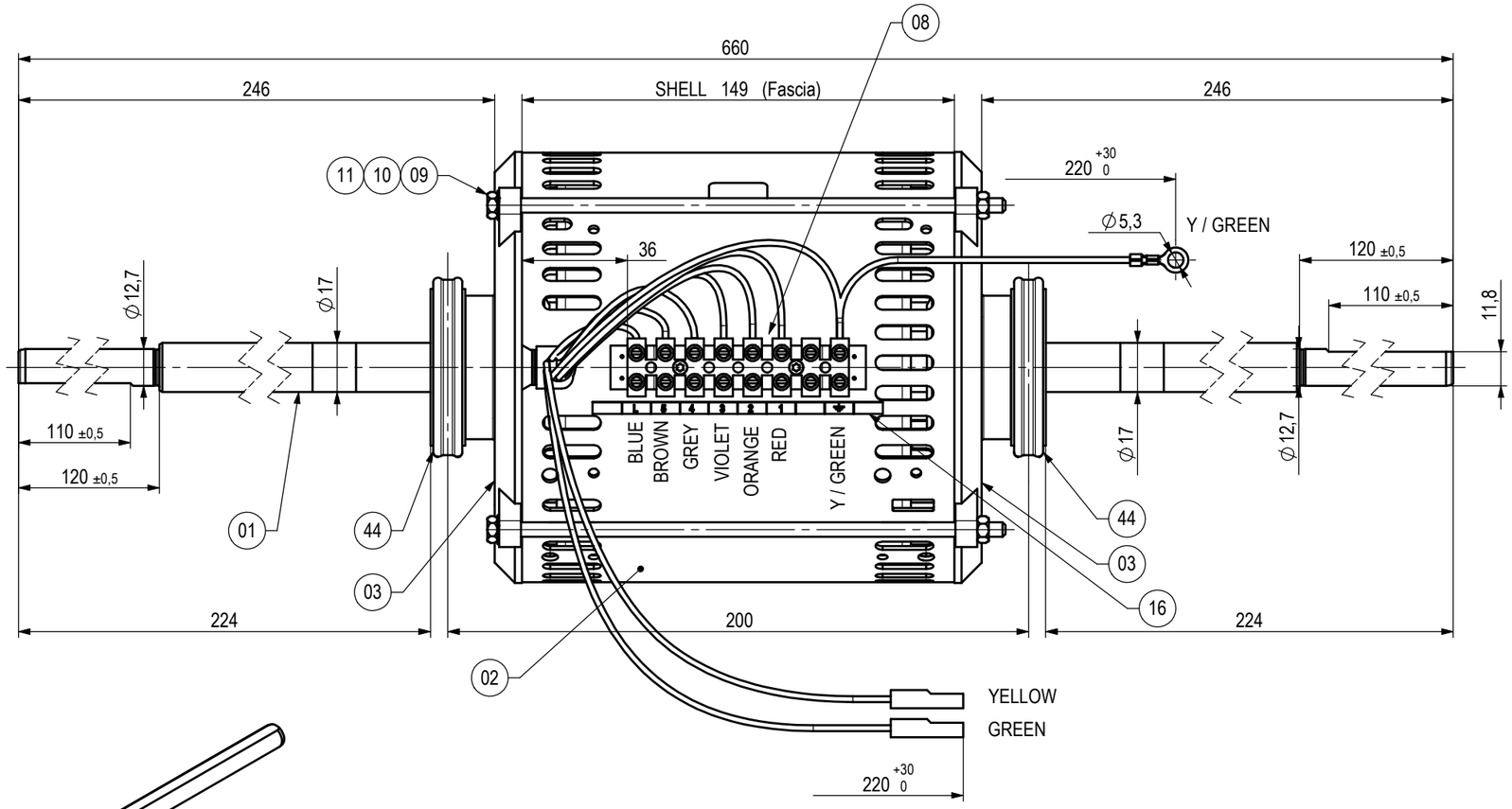

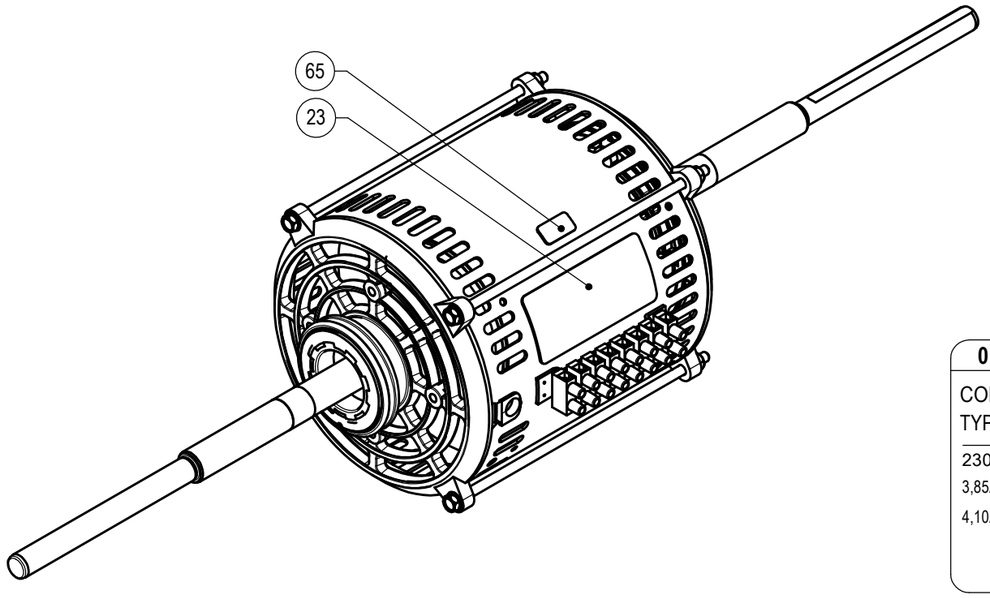

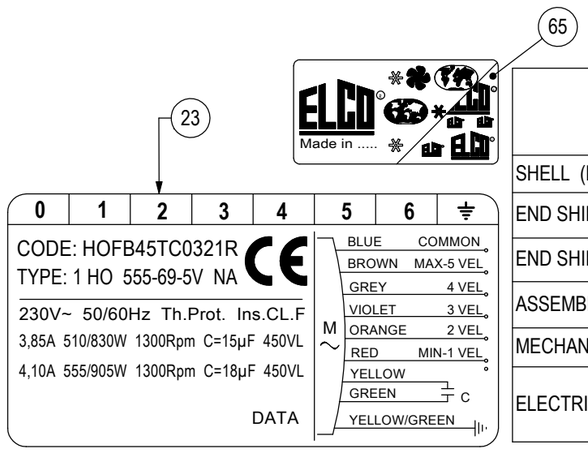

CLASS "F" MOTOR - BALL BEARING MANUFACTERD (Motore classe "F" - Esecuzione a Cuscinetti)	
SHELL (Fascia)	OPEN (Aperta)
END SHIELD - CABLE SIDE (Coperchio lato cavi)	OPEN (Aperta)
END SHIELD - OPPOSITE CABLE SIDE (Copechio lato opposto cavi)	OPEN (Aperta)
ASSEMBLY SPECIFICATION No. (Normativa per note di montaggio)	EL.UN.0009
MECHANICAL SPECIFICATION No. (Normativa per note di controllo meccanico)	EL.CM.0002
ELECTRICAL SPECIFICATION No. (Prescrizione per controllo elettrico)	M.2297/1

Rel.	Date	Description	Executor signature	Checked
.	.	.	.	.
.	.	.	.	.
.	.	.	.	.
.	.	.	.	.
.	.	.	.	.
.	.	.	.	.

M O D I F I C A T I O N S

For dimension without tollerance see standard UNI EN 22768-mK

Treatement .
Material .

A3

ELCO®

Drawn Baronio G.
Date 22/01/2013
Check R. Sitori
Scale ---

SINGLE PHASE MOTOR
MOTORE 1 HO 555-69-5V NA
230V 50/60Hz Th.Prot. CL.F

Weight gr. .
Ref. No RdS 13/ 0020

Release -

HOFB45TC0321R

DRAWING MADE BY **CAD** HAND MADE MODIFICATIONS ARE FORBIDDEN

THIS DRAWING IS OUR PROPERTY. ANY PARTIAL OR COMPLETE COPY IS FORBIDDEN WITHOUT PREVIOUS WRITTEN AUTHORISATION