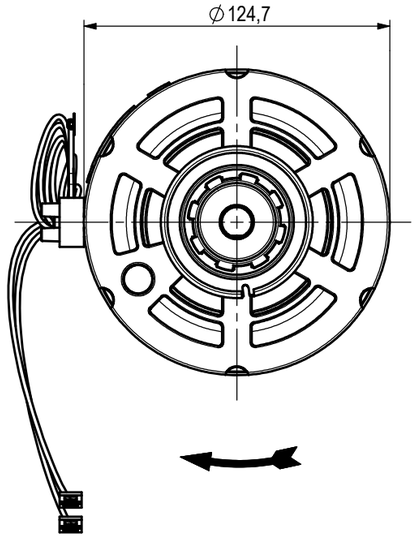

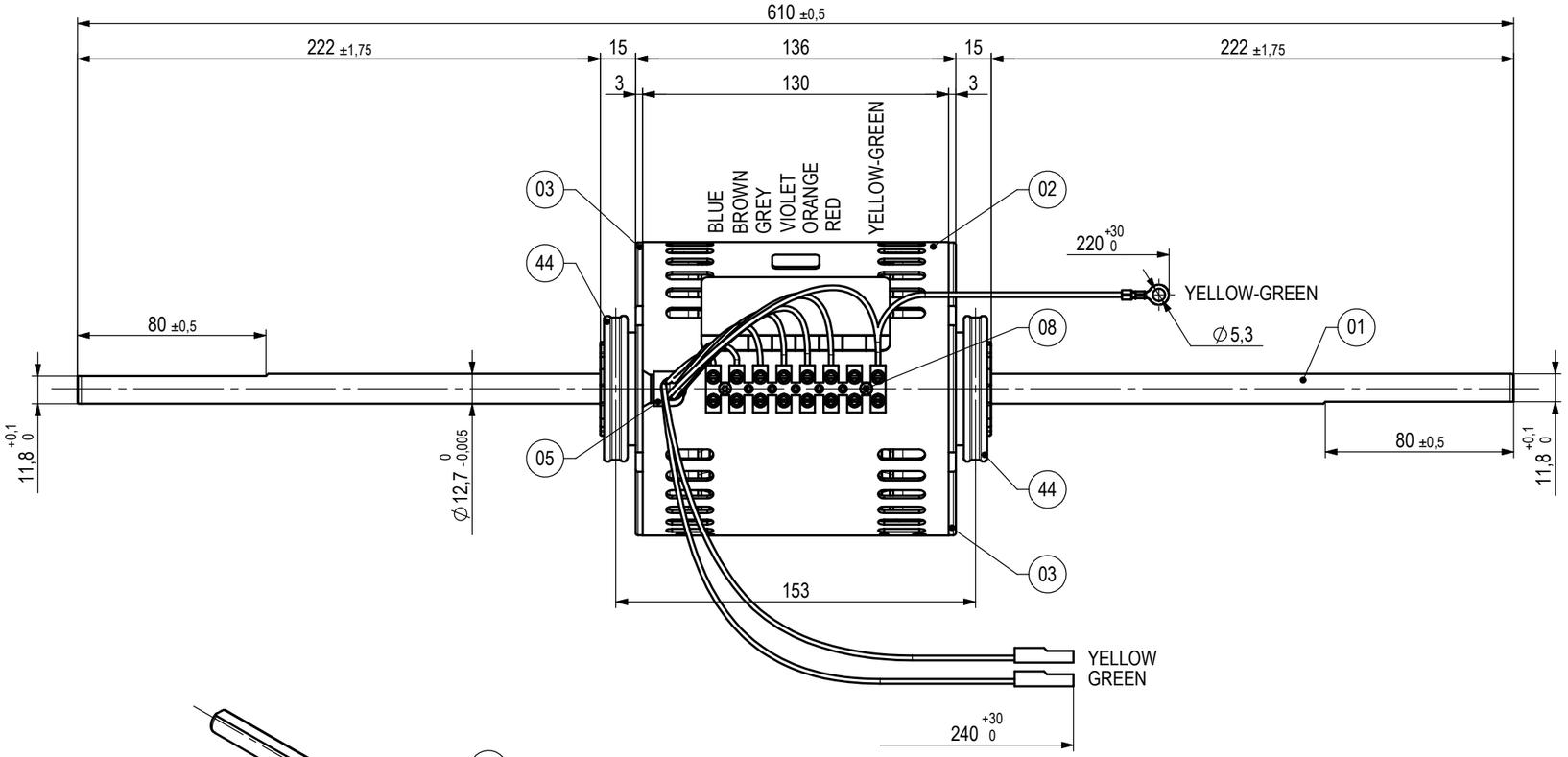

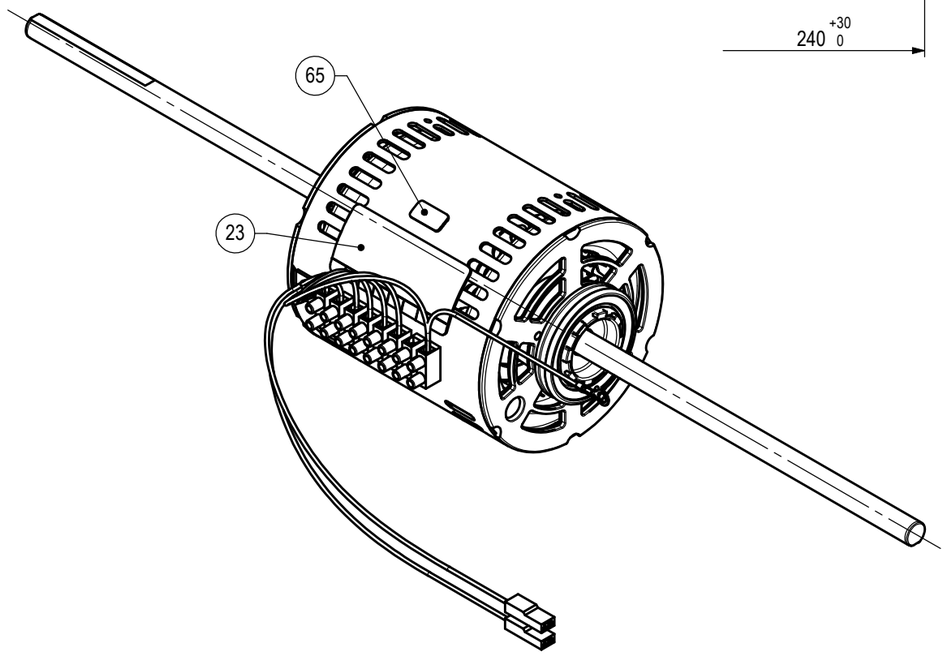

CLASS "F" MOTOR - SLEEVE BEARINGS MANUFACTURED (Motore in classe "F" - Esecuzione a bronzine)	
AXIAL CLEARANCE (Gioco assiale)	1,0 - 3,5 mm
SHELL (Fascia)	OPEN (Aperta)
END SHIELD - LEADS SIDE (Coperchio lato Cavi)	OPEN (Aperto)
END SHIELD - OPPOSITE LEADS SIDE (Cop. lato opposto cavi)	OPEN (Aperto)
ASSEMBLING SPECIFICATION No. (Normativa per note di montaggio)	EL.UN.0009
MECHANICAL SPECIFICATION No. (Normativa per note di controllo meccanico)	EL.CM.0002
ELECTRICAL SPECIFICATION No. (Controllo elettrico con prescrizione)	M.2295/1

23

0	1	2	3	4	5	6	⏚

CODE: FGFB45TB0319R
TYPE: 1FG 265-69-5V NA

230V~ 50/60Hz Th.Prot. Ins.CL.F
1,85A 230/400W 1300Rpm C=6,3µF 450VL
1,90A 245/420W 1300Rpm C=8,0µF 450VL
2A 265/455W 1300Rpm C=10µF 450VL
DATA

M ~
BLUE COMMON
BROWN MAX-5 VEL
GREY 4 VEL
VIOLET 3 VEL
ORANGE 2 VEL
RED MIN-1 VEL
YELLOW
GREEN C
YELLOW/GREEN

Rel.	Date	Description	Executor signature	Checked
.	.	.	.	.
.	.	.	.	.
.	.	.	.	.
.	.	.	.	.
.	.	.	.	.
.	.	.	.	.

M O D I F I C A T I O N S

For dimension without tollerance see standard UNI EN 22768-mK

Treatement .
Material .

A3

ELCO

Drawn Baronio G.
Date 25-01-2013
Check Sittori
Scale ---

MOTOR
MOTORE 1FG 265-69-5V NA
230V 50/60Hz Th.Prot. CL.F

Weight gr. .
Ref. No RdS 13/ 0020
Release -

FGFB45TB0319R

DRAWING MADE BY **CAD** HAND MADE MODIFICATIONS ARE FORBIDDEN

THIS DRAWING IS OUR PROPERTY. ANY PARTIAL OR COMPLETE COPY IS FORBIDDEN WITHOUT PREVIOUS WRITTEN AUTHORISATION