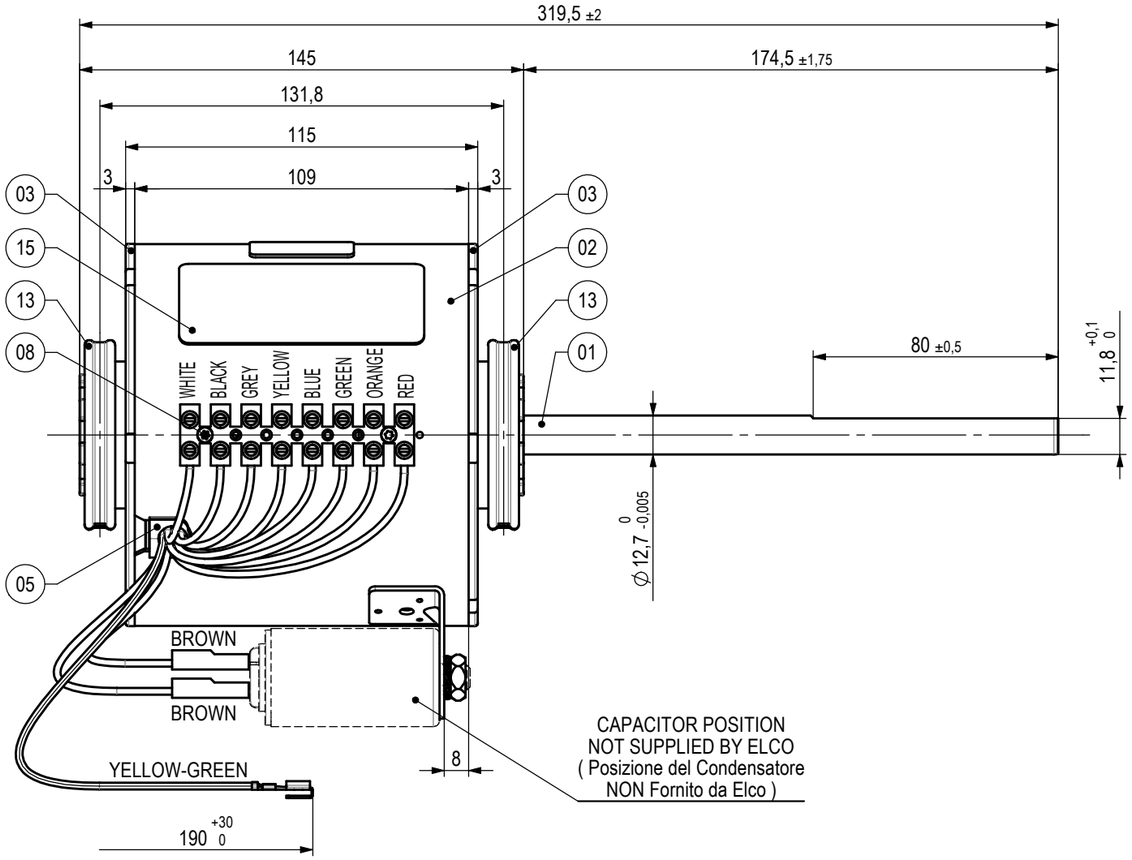

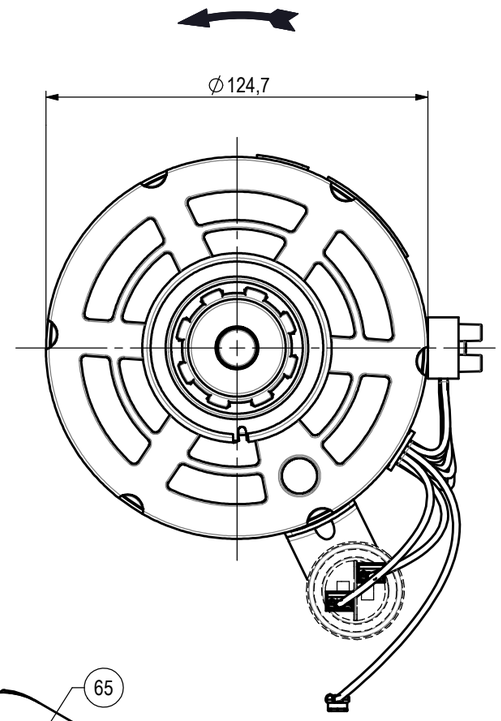

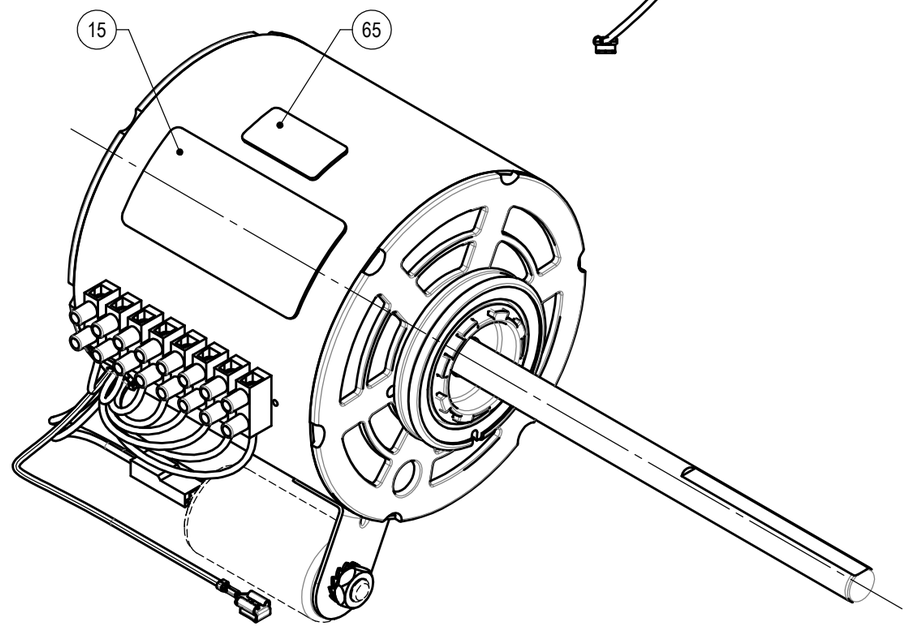

CLASS "F" MOTOR - SLEEVE BEARINGS MANUFACTURED (Motore in classe "F" - Esecuzione a bronzine)	
AXIAL CLEARANCE (Gioco assiale)	1,0 - 3,5 mm
SHELL (Fascia)	CLOSED (Chiusa)
END SHIELD - LEADS SIDE (Coperchio lato Cavi)	CLOSED (Chiuso)
END SHIELD - OPPOSITE LEADS SIDE (Cop. lato opposto cavi)	CLOSED (Chiuso)
ASSEMBLING SPECIFICATION No. (Normativa per note di montaggio)	EL.UN.0009
MECHANICAL SPECIFICATION No. (Normativa per note di controllo meccanico)	EL.CM.0002
ELECTRICAL SPECIFICATION No. (Controllo elettrico con prescrizione)	M.1939/3

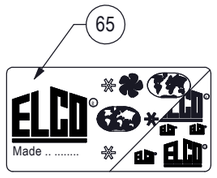

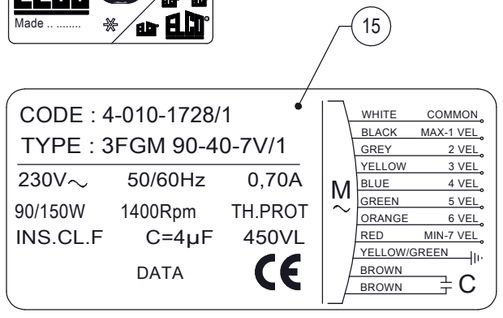

Rel.	Date	Description	Executor signature	Checked
.	.	.	.	.
.	.	.	.	.
.	.	.	.	.
.	.	.	.	.
.	.	.	.	.
.	.	.	.	.

M O D I F I C A T I O N S

For dimension without tollerance see standard UNI EN 22768-mK

Treatement .
Material .

A3

ELCO

Drawn Pedrini R.
Date 12-12-2013
Check Sartori
Scale ---

MOTOR
TYPE : 3FGM 90-40-7V/1
230V 50/60Hz Th.Prot. CL.F

Weight gr. .
Ref. No 4-010-1728/50
Release -

4-010-1728/1

1 2

DRAWING MADE BY **CAD** HAND MADE MODIFICATIONS ARE FORBIDDEN

THIS DRAWING IS OUR PROPERTY. ANY PARTIAL OR COMPLETE COPY IS FORBIDDEN WITHOUT PREVIOUS WRITTEN AUTHORISATION