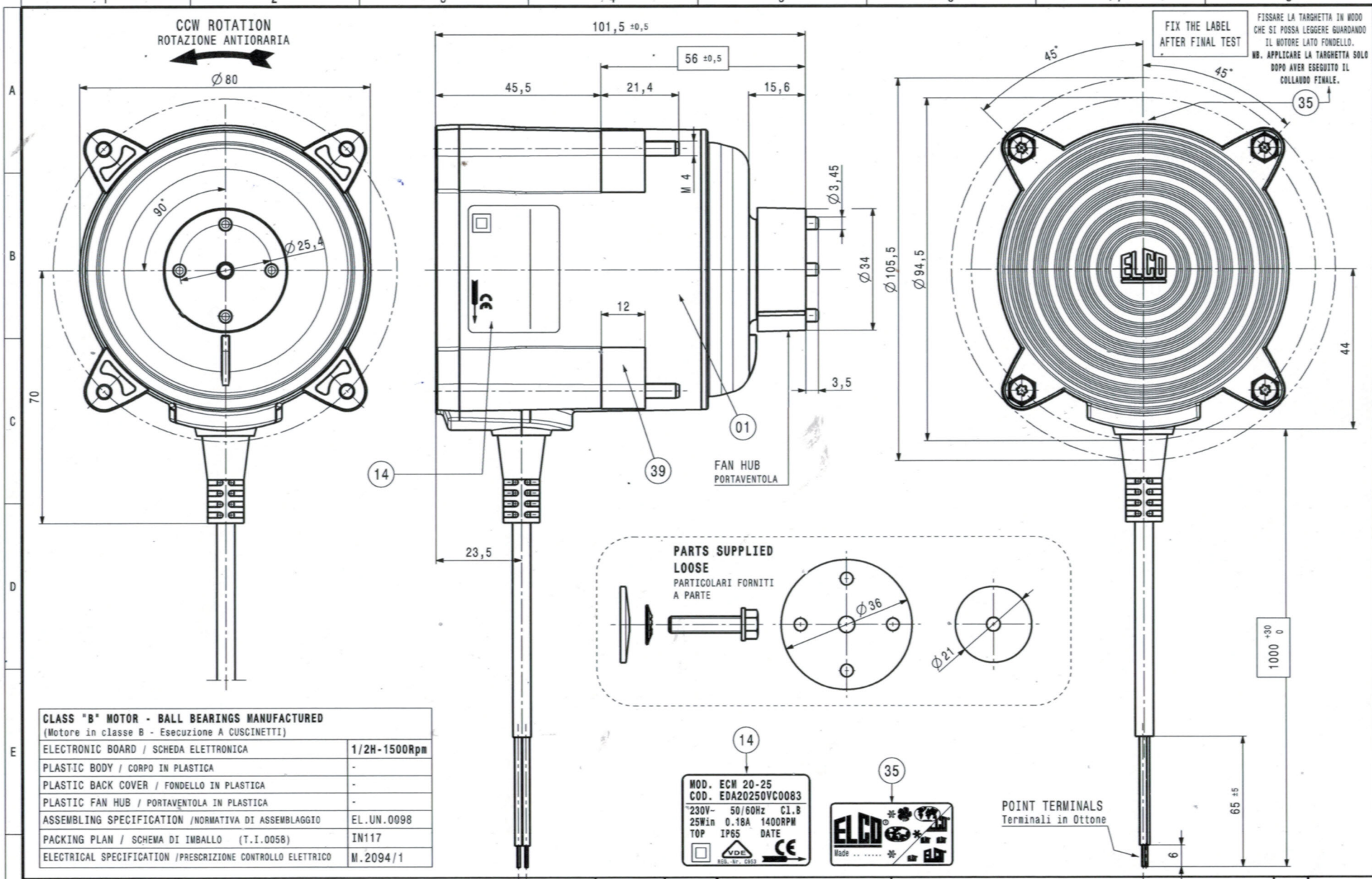

FIX THE LABEL AFTER FINAL TEST

FISSARE LA TARGHETTA IN MODO CHE SI POSSA LEGGERE GUARDANDO IL MOTORE LATO FONDELLO.
NB. APPLICARE LA TARGHETTA SOLO DOPO AVER ESEGUITO IL COLLAUDO FINALE.

DRAWING MADE BY CAD
HAND MADE MODIFICATIONS ARE FORBIDDEN

CLASS "B" MOTOR - BALL BEARINGS MANUFACTURED (Motore in classe B - Esecuzione A CUSCINETTI)	
ELECTRONIC BOARD / SCHEDA ELETTRONICA	1/2H-1500Rpm
PLASTIC BODY / CORPO IN PLASTICA	-
PLASTIC BACK COVER / FONDELLO IN PLASTICA	-
PLASTIC FAN HUB / PORTAVENTOLA IN PLASTICA	-
ASSEMBLING SPECIFICATION /NORMATIVA DI ASSEMBLAGGIO	EL.UN.0098
PACKING PLAN / SCHEMA DI IMBALLO (T.I.0058)	IN117
ELECTRICAL SPECIFICATION /PRESCRIZIONE CONTROLLO ELETTRICO	M.2094/1

Rel	Date	Description	Executor signature	Checked
.	.	.	.	.

MODIFICATIONS

For dim. without tollerance see standard UNI EN 22768-mK

Treatment .
Material .

A3

Drawn M.Cazzaniga
Date 16/09/10
Check T.Sirtori
Scale 1 : 1

MOTOR ECM 20 230V IP65 V
230V 50/60Hz - 1500Rpm
PROTECTION DEGREE IP65

Weight .
Ref.No EDA20250NC0083
Release -

EDA20250VC0083

THIS DRAWING IS OUR PROPERTY. ANY PARTIAL OR COMPLETE COPY IS FORBIDDEN WITHOUT PREVIOUS WRITTEN AUTHORISATION